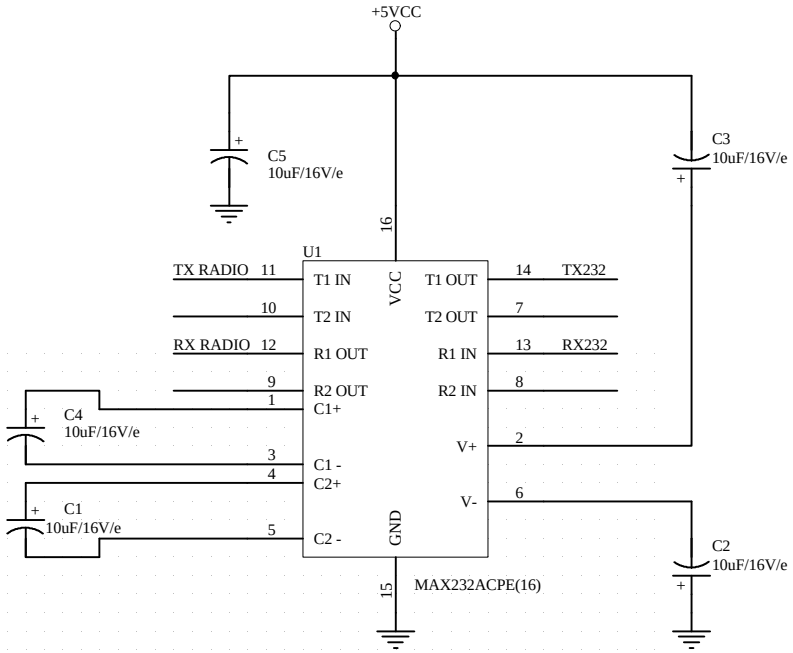

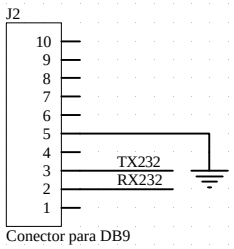

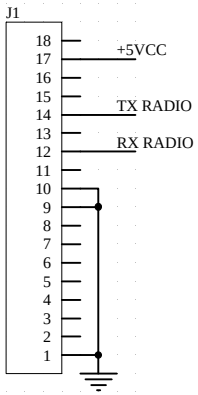

Title		
Size A4	Number	Revision
Date: 23-Jul-2000		Sheet of
File: F:\UFMG\..\serial.sch		Drawn By: